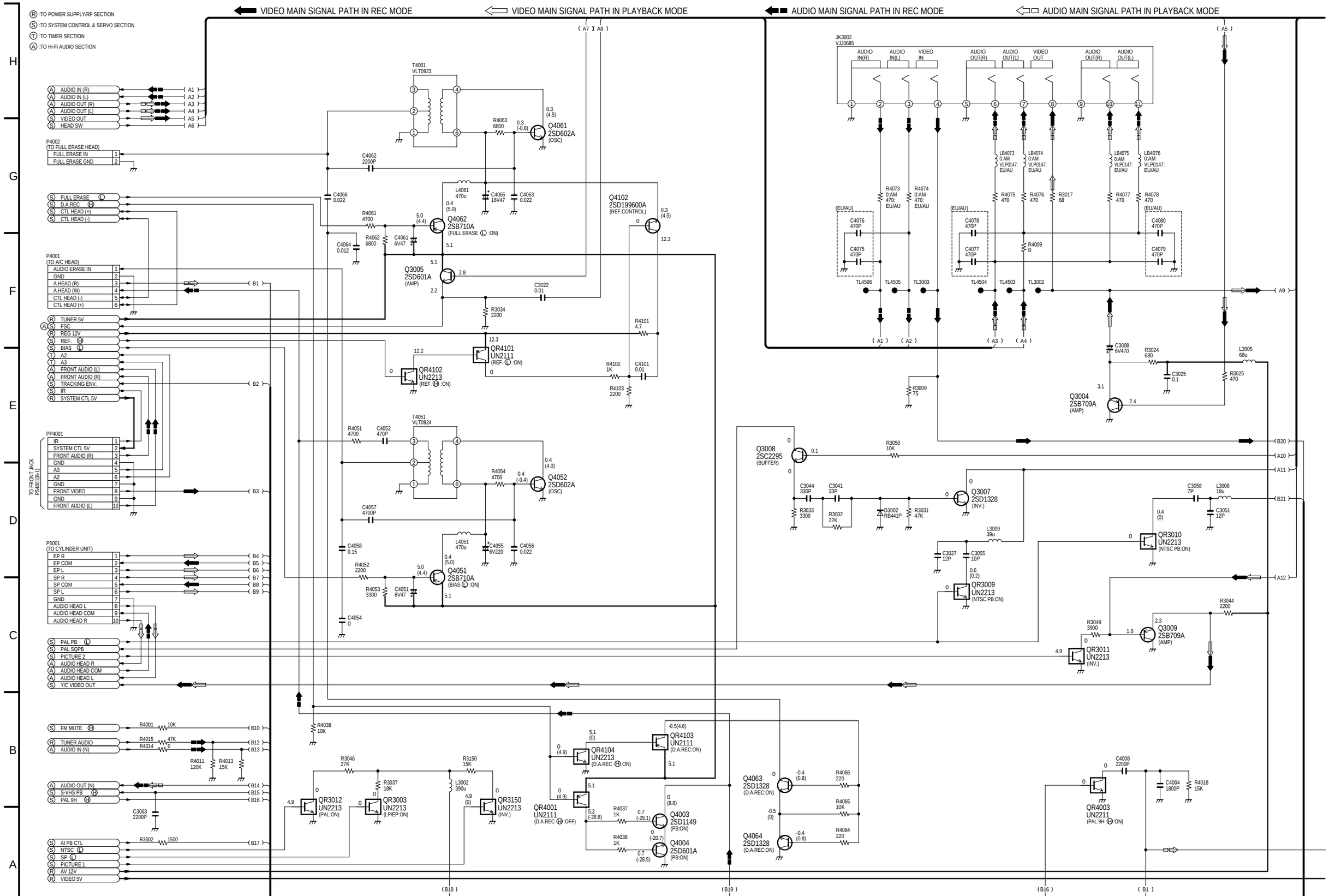

NOTE:THE MEASUREMENT MODE OF THE DC VOLTAGE IN THE BRACKETS( )ON THIS DIAGRAM IS RECORD MODE WITH PAL COLOUR SIGNAL.(SP MODE)

THE MEASUREMENT MODE OF THE DC VOLTAGE OUT OF THE BRACKETS ON THIS DIAGRAM IS PLAYBACK MODE WITH PAL COLOUR SIGNAL.(SP MODE)

NV-FJ730AM/EU/AU
LUMINANCE & CHROMINANCE SECTION SCHEMATIC DIAGRAM